BRUCE'S CUSTOM COVERS
A division of Aircraft Covers, Inc.

18850 Adams Ct
Morgan Hill, CA 95037
www.AircraftCovers.com

Phone: 408/738-3959
Toll Free (U.S.): 800/777-6405
Fax: 408/738-2729
Email: bruce@aircraftcovers.com

manufacturer of the finest custom-made aircraft covers

Tech Sheet: Piper PA-31P: Mojave

(piper-PA31P.pdf)



Piper Navajo Cockpit Cover, extended to cover emerg. door.

Section 1: Canopy/Cockpit/Fuselage Covers

Canopy Covers help reduce damage to your airplane's upholstery and avionics caused by excessive heat, and they can eliminate problems caused by leaking door and window seals. They keep the windshield and window surfaces clean and help prevent vandalism and theft.

The **Piper PA-31P: Mojave Canopy Cover** is designed to enclose the windshield, all side windows and canopy roof. The Canopy Cover is custom designed for each model, as well as your aircraft's specific antenna and temperature probe placements. The Canopy Cover attaches using adjustable "belly straps", which run under the belly and connect to the other side of the cover with a quick-release plastic buckle. To ensure the most secure fit, high-quality shock cord is enclosed in the hem of the cover to help keep the cover tighter against the airplane. Canopy Covers are commonly referred to as Cabin Covers, Fuselage Covers, Canvas Covers, Canopy Caps, etc.

Each Canopy Cover is custom sewn and the corners are trimmed to match the colors of the airplane. The airplane's registration number can be imprinted onto both sides of the cover for an additional charge. A duffle bag is included with all Canopy Covers.

This cover type is made from Silver Acrylic Sunbrella canvas and is 100% lined with a soft and smooth microfiber. Bruce's Custom Covers developed this material combination especially for aircraft protection. The outer material is medium weight and treated for water resistance, UV resistance and anti-static buildup. The inner lining is a very soft and smooth microfiber to prevent scratching. The material is very reflective, and tests show that the cabin interior temperature can be reduced to near-ambient temperature on

the hottest of days. It is water, ice and snow repellent, yet breathable to allow moisture to escape from between the cover and the aircraft surface.

The **Piper PA-31P: Mojave Cockpit Cover** helps reduce damage to the upholstery and avionics caused by excessive heat and can eliminate problems caused by leaking door and window seals. They keep the windshield and window surfaces clean and help prevent vandalism and theft.

Cockpit covers are designed to cover the windshield and side windows of the cockpit. Attachment buckles are made of nonmetal *Delrin*, designed for rugged outdoor use. The windshield cover comes with a duffle bag. The N-number can be imprinted onto the cover for an extra charge. The windshield cover is trimmed in the colors of the aircraft.

This cover type is made from Silver Acrylic Sunbrella canvas and is 100% lined with a soft and smooth microfiber. Bruce's Custom Covers developed this material combination especially for aircraft protection. The outer material is medium weight and treated for water resistance, UV resistance and anti-static buildup. The inner lining is a very soft and smooth microfiber to prevent scratching. The material is very reflective, and tests show that the cabin interior temperature can be reduced to near-ambient temperature on the hottest of days. It is water, ice and snow repellent, yet breathable to allow moisture to escape from between the cover and the aircraft surface.



Cessna 441 Conquest II Cockpit Cover



Piper Navajo Cockpit Cover, extended to cover emerg. door.

Description	Part Number	Price
COCKPIT COVER	**PA31P-020**	**$605.00**
CANOPY COVER	**PA31P-030**	**$1060.00**

Section 2: Engine/Prop Covers

Engine Covers will cinch around or behind the spinner, cover the entire engine cowl area including the engine air cooling and induction air inlets, and fastens together with Velcro beneath the spinner down the front of the cowling. The Engine Cover is attached with a belly strap aft of the firewall, and can Velcro to the Canopy Cover. Engine Covers are normally made from Solution-Dyed Polyester or Acrylic *Sunbrella*. An Insulated version of the engine cover can be made with a thicker, quilted, and water-repellent material. The Insulated Engine Cover works well in cold climates to help with engine preheating.

The **Piper PA-31P: Mojave Insulated Engine Cover** works well in cold climates to help with engine preheating. You can add an access flap for an additional fee. It will cinch around or behind the spinner, cover the entire engine cowl area including the engine air inlets, and fastens together with Velcro beneath the spinner down the front of the cowling.

Insulated Covers Material - A special composite material of solution-dyed polyester, 3M Thinsulate insulation, and soft nylon interior fabric. Our insulated covers are designed to complement an engine preheater and help retain heat in the engine compartment after shutdown. If you operate your aircraft in cold-weather, these covers will help prevent engine wear and tear.

The **Piper PA-31P: Mojave Propeller Cover** is a one-piece design that form fits to the blades and spinner. The prop cover slips over the blades and spinner and is attached by a plastic all-weather zipper on the bottom of the blades. Propeller covers can be

made for multiple numbers of blades, and for wooden, composite or metal props. The Propeller Cover is normally made from Acrylic *Sunbrella* or Solution-Dyed Polyester and is lined 100% with a soft and smooth microfiber. **Insulated Propeller Covers** works well in cold climates to help with engine preheating. These insulated versions are made with a thicker, quilted, water-repellent, and breathable material.

This cover type is made from Silver Acrylic Sunbrella canvas and is 100% lined with a soft and smooth microfiber. Bruce's Custom Covers developed this material combination especially for aircraft protection. The outer material is medium weight and treated for water resistance, UV resistance and anti-static buildup. The inner lining is a very soft and smooth microfiber to prevent scratching. The material is very reflective, and tests show that the cabin interior temperature can be reduced to near-ambient temperature on the hottest of days. It is water, ice and snow repellent, yet breathable to allow moisture to escape from between the cover and the aircraft surface.

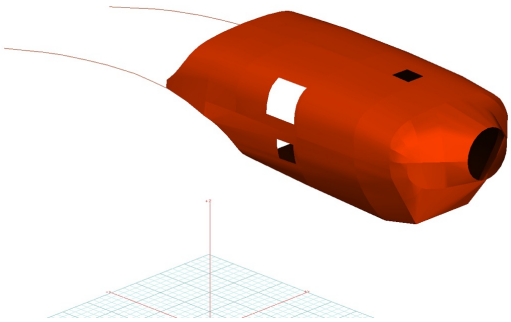

Piper Navajo Insulated Engine Cover, 3D model

Description	Part Number	Price
PROPELLOR/SPINNER COVERS, 3 Blade (set of 2)	**PA31P-120**	**$800.00**
INSULATED PROPELLOR/SPINNER COVER, 3 Blade (set of 2)	**PA31P-125**	**$1115.00**
ENGINE COVERS (set of 2)	**PA31P-130**	**$965.00**
INSULATED ENGINE COVERS (set of 2)	**PA31P-135**	**$1300.00**

Section 3: Plugs & Protection

Piper PA-31P: Mojave Heat Resistant Pitot Tube Covers, are made of Naugahyde vinyl, and lined with a non-burning material. They are designed to cover the entire pitot assembly, slipping over the tube and tightening around the base with a Velcro strap detail. A "Remove Before Flight" streamer is attached to the cover. **Heat Resistant Pitot Covers** are an upgrade to our standard design, and help prevent the pitot cover from melting onto the tube if the pitot heat is accidentally turned on while installed. If you want the set tethered together, please let us know.

Piper PA-31P: Mojave Pitot Tube Covers, NOT HEAT RESISTANT TYPE, are made of Naugahyde vinyl, and are designed to cover the entire pitot assembly. Slipping over the tube, the cover tightens around the base with a Velcro strap detail. A "Remove Before Flight" streamer is attached to the cover. **Heat Resistant Pitot Covers** are an upgrade to this design, and help prevent the pitot cover from melting onto the tube if the pitot heat is accidentally turned on while installed. If you want the set tethered together, please let us know.

Engine Inlet Plugs are custom fit for your Piper PA-31P: Mojave intakes, made with heavy-duty vinyl material, and stuffed with a single block of sculpted urethane foam. Each plug has a zipper that allows the foam to be removed and dried if necessary. Engine plugs have warning flags that are visible from the cockpit or 'remove before flight' streamers sewn onto the face of the plugs. Most plugs are imprinted with the aircraft registration number in black for an extra charge. Storage bag NOT included. Engine plugs may be inserted after flight when the engine is still warm. **Engine Inlet Plugs are commonly referred to as Cowl Plugs, Intake Plugs, Cowl Blocks, Engine Blocks, and Engine Bungs.**



Standard Pitot Cover



Mooney Pitot Cover

Description	Part Number	Price
ENGINE INLET PLUGS (set of 4)	**PA31P-110**	**$315.00**
PITOT COVERS (set of 2)	**PA31P-HP1**	**$60.00**
PITOT COVERS, heat resistant type (set of 2)	**PA31P-HPN**	**$120.00**

Section 4: Wing/Tail/Empennage Covers

Horizontal Stabilizer Covers are a perfect solution to protect your paint from sun damage and prevent frost, snow, ice buildup, and corrosion. They are made from Solution-Dyed Polyester or Acrylic *Sunbrella*. They cover the entire upper surface of the stabilizers and overlap around the leading and trailing edges as well as the wing tip. The covers secure under each stabilizer with adjustable straps. In some instances, cut-outs are made in the trailing edge of the wing covers to accommodate for static wicks. **Horizontal Stabilizer Covers** for winter use or long-term all year use are usually available, and are normally made from Solution-Dyed Polyester or Acrylic *Sunbrella*. A Hail Protection version can be made which incorporates dense closed cell foam into the entire upper surface of the wing covers to help prevent hail damage. Although these covers are bulky, they do help protect your wing and control surfaces against small to medium-size hail.

ALL-YEAR USE MATERIAL - Made with Silver Acrylic Sunbrella canvas, the all-year use material is the best option for sun protection and cover longevity. This heavier more durable material is intended for all weather conditions, such as rain and snow or lots of sun.

WINTER USE MATERIAL - Made with Solution-Dyed Polyester fabric, this option is intended for seasonal use to aid in deicing, rain mitigation, or for occasional travel. The material is lighter and more compact, but more susceptible to UV damage and may have a shorter useful life if used continuously outside than the all-year use material.

The **Piper PA-31P: Mojave Wing Covers** are a perfect solution to protect your paint from sun damage and prevent winter frost, snow, ice buildup, and corrosion. They are made from Solution-Dyed Polyester or Acrylic *Sunbrella* and form-fit to slip around each wing tip, cover the entire upper surface of the wing and wrap around the leading and trailing edges. The covers secure under the wing with adjustable straps from the trailing edge to the leading edge. The wing covers can also attach to each other with adjustable straps at the leading and trailing edges of the wing under the belly of the plane. In some instances, cut-outs are made in the trailing edge of the wing covers to accommodate static wicks. We have the ability to also accommodate wing tip modifications, such as STOL kits, droop tips, and vortex generators. Wing covers are labeled LEFT and RIGHT for your convenience. Wing Covers are available for winter use or long-term, all-year use. A Hail Protection version can be made which incorporates very dense closed cell foam into the entire upper surface of the wing covers to help prevent hail damage. Although these covers are bulky, they do help protect your wing and control surfaces against small to medium-size hail.

ALL-YEAR USE MATERIAL - Made with Silver Acrylic Sunbrella canvas, the all-year use material is the best option for sun protection and cover longevity. This heavier more durable material is intended for all weather conditions, such as rain and snow or lots of sun.

WINTER USE MATERIAL - Made with Solution-Dyed Polyester fabric, this option is intended for seasonal use to aid in deicing, rain

mitigation, or for occasional travel. The material is lighter and more compact, but more susceptible to UV damage and may have a shorter useful life if used continuously outside than the all-year use material.

Description	Part Number	Price
WING COVERS, OUTBOARD OF ENGINE NACELLES, WINTER USE (set of 2)	**PA31P-220**	**$785.00**
WING COVERS, OUTBOARD OF ENGINE NACELLES, ALL YEAR USE (set of 2)	**PA31P-225**	**$1020.00**
HORIZONTAL STABILIZER COVERS, ALL YEAR USE (set of 2)	**PA31P-305**	**$730.00**
HORIZONTAL STABILIZER COVERS, WINTER USE (set of 2)	**PA31P-310**	**$565.00**

Section 5: HeatShields & Sun Reflectors

Cabin Heatshields are interior sunshades for the aircraft's passenger cabin area. The product is a unique composite of closed-cell foam with a silver mylar finish. The semi-rigid design is stiff enough to stand inside the window framing. The set folds up flat and is easily stored in the included storage sleeve. Some designs may require velcro and suction cups. A Heatshield is an excellent short-term remedy for cockpit overheating, but an external fabric cover is more effective for long-term protection.

Cockpit Heatshields are interior sunshades for the aircraft's cockpit. The product is a unique composite of closed-cell foam with a silver mylar finish. The semi-rigid design is stiff enough to stand inside the window framing. The set folds up flat and is easily stored in the included storage sleeve. Some designs may require velcro and suction cups. A Heatshield is an excellent short-term remedy for cockpit overheating, but an external fabric cover is more effective for long-term protection.



Piper PA-31 Models Cockpit HeatShields



Piper PA-31 Models Cockpit HeatShields

Description	Part Number	Price
WINDSHIELD HEATSHIELDS (set of 2)	**PA31P-905**	**$165.00**
CABIN HEATSHIELDS (set of 5)	**PA31P-910**	**$285.00**
COCKPIT HEATSHIELDS (set of 4)	**PA31P-915**	**$285.00**

Section 7: Light Weight Products: Travel Covers and FlyAway Covers

The **Lightweight Travel Canopy Cover** will cover the same area as our standard Canopy Cover, but the material used is very lightweight and will fold up and store in a much smaller space. This cover is ideal for the airplane that is stored in a hangar full-time and only needs a cover on rare occasions.

Travel Covers are made with Silver Solution-Dyed Polyester fabric and only lined over the windshield to save weight. The material is lightweight and more compact for easy stowage in the aircraft. The polyester material is water resistant, but only intended for occasional use outside. We also have an ultra lightweight material available for fitted hangar dust covers. For daily outdoor use, the

non-travel Sunbrella Cover is the best choice.

The **Lightweight Travel Cockpit Cover** will cover the same area as our standard Canopy Cover, but the material used is very lightweight and will fold up and store in a much smaller space. This cover is ideal for the airplane that is stored in a hangar full-time and only needs a cover on rare occasions.

Travel Covers are made with Silver Solution-Dyed Polyester fabric and only lined over the windshield to save weight. The material is lightweight and more compact for easy stowage in the aircraft. The polyester material is water resistant, but only intended for occasional use outside. We also have an ultra lightweight material available for fitted hangar dust covers. For daily outdoor use, the non-travel Sunbrella Cover is the best choice.

Description	Part Number	Price
TRAVEL COVER, Light Weight Travel Cockpit Cover	**PA31P-800**	**$485.00**
TRAVEL COVER, Light Weight Canopy Cover	**PA31P-810**	**$845.00**

Prices subject to change. Other Covers and Design Alterations: Prices on request.
Prices are FOB Morgan Hill, CA. Sales tax on orders shipped to California addresses. Orders take approximately 3 weeks to complete. For domestic orders we normally ship by UPS ground service. Next day shipping and air parcel post is available on request. We can take payment by Visa, Mastercard, American Express, or Discover.

Bruce's Custom Covers offers protective covers and plugs for virtually every type of airplane, jet and helicopter. If you have questions about our products please call any time TOLL FREE: 800/777-6405, or FAX: 408/738-2729.

BRUCE'S CUSTOM COVERS

A division of Aircraft Covers, Inc.

Canopy Cover Measuring Worksheet

(Low-wing: Temperature Probe & Antennas)

Instructions: Measure to the nearest 1/8" and only fill in what applies. You may email, fax or phone in the measurements.

Aircraft Reg / Tail Number: _____ Aircraft Type: _____ Year: _____

Name: _____ Phone & Email: _____

OAT Placement

A	From top of windshield			
B	Offset from centerline			
	Left (pilot)	Center	Right (co-pilot)	
C	Height			
D	From FWD edge			
E	From lower edge			
F	From forward corner			
G	Distance forward			

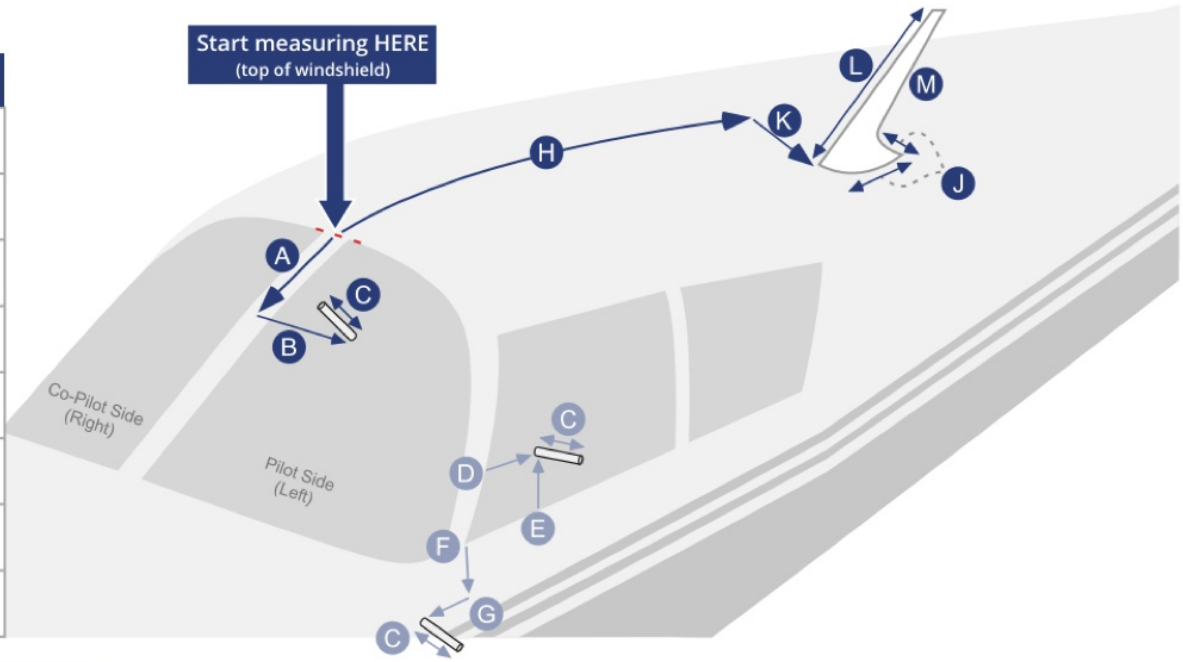

Antenna Placements	Example (inches or metric)	Antenna #1	Antenna #2	Antenna #3	Antenna #4
H Distance from top center windshield to front of Antenna	34 5/8"				
J Length/Width of Antenna base	5 1/2" x 3 1/4"				
K Offset from Centerline	9 1/2"				
Antenna Offset (mark one)	Left (pilot) / Center X / Right (co-pilot)	Left (pilot) / Center / Right (co-pilot)	Left (pilot) / Center / Right (co-pilot)	Left (pilot) / Center / Right (co-pilot)	Left (pilot) / Center / Right (co-pilot)
L Slope length of Antenna (types 1-3 only)	18"				
M Antenna Type (see types below)	1				

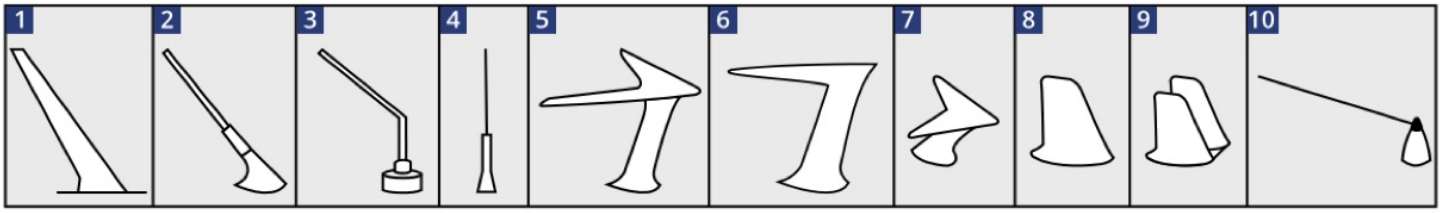

Ph: 408/738-3959 • Toll Free: 800/777-6405 • Fax: 408/738-2729 • bruce@aircraftcovers.com

BRUCE'S CUSTOM COVERS

A division of Aircraft Covers, Inc.

Propellor Cover Measuring Worksheet

Instructions: Measure to the nearest 1/8" and only fill in what applies. You may email, fax or phone in the measurements.

Aircraft Reg / Tail Number: _____ Aircraft Type: _____ Year: _____

Name: _____ Phone & Email:

Propellor Measurements

Please check one:	2 - Blade	3 - Blade	4 - Blade
A Measure along surface of cone			
B Measure "straight line" base to tip			
C Base to top of blade root opening			
D Provide diameter or circumference			
E Provide diameter or circumference			
F Blade root to prop tip			
G Trailing edge to leading edge			
H Trailing edge to leading edge			
J Trailing edge to leading edge			

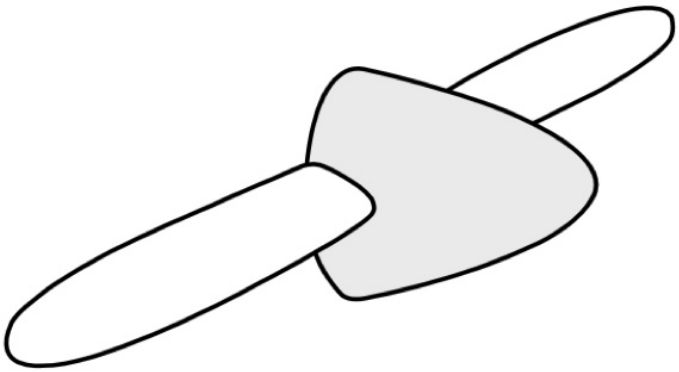

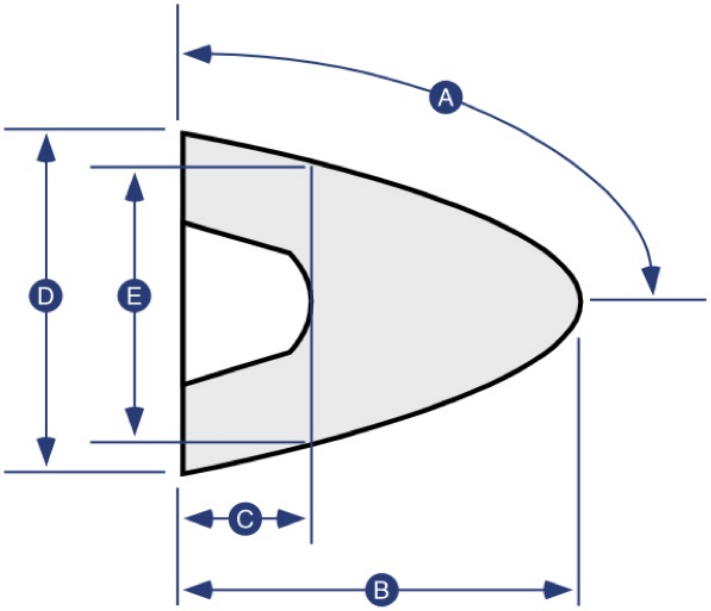

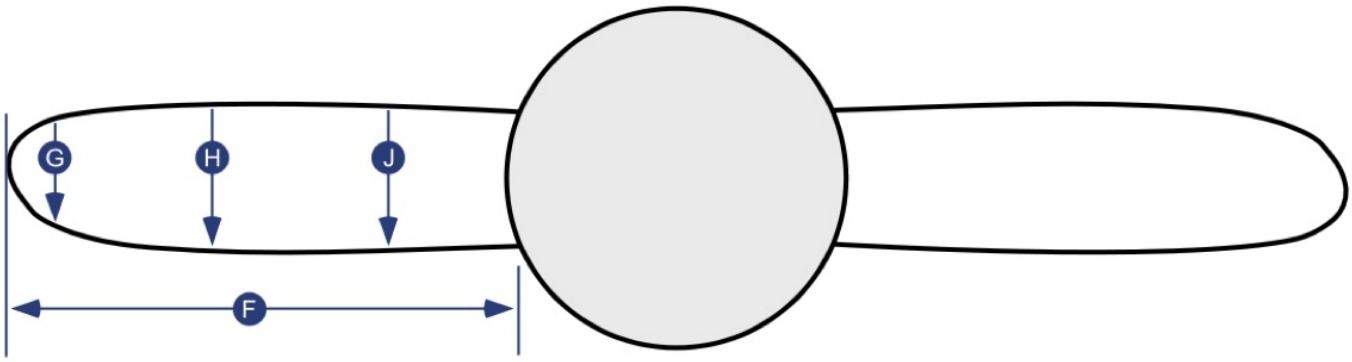

Ph: 408/738-3959 • Toll Free: 800/777-6405 • Fax: 408/738-2729 • bruce@aircraftcovers.com