BRUCE'S CUSTOM COVERS
A division of Aircraft Covers, Inc.

18850 Adams Ct
Morgan Hill, CA 95037
www.AircraftCovers.com

Phone: 408/738-3959
Toll Free (U.S.): 800/777-6405
Fax: 408/738-2729
Email: bruce@aircraftcovers.com

manufacturer of the finest custom-made aircraft covers

Tech Sheet: Aero L-39 & L-59 Albatros

(aero-L39.pdf)



Aero L-39 & L-59 Albatros Canopy Cover

Section 1: Canopy/Cockpit/Fuselage Covers

Canopy Covers help reduce damage to your airplane's upholstery and avionics caused by excessive heat, and they can eliminate problems caused by leaking door and window seals. They keep the windshield and window surfaces clean and help prevent vandalism and theft.

The **Aero L-39 & L-59 Albatros Canopy Cover** is designed to enclose the windshield, all side windows and canopy roof. The Canopy Cover is custom designed for each model, as well as your aircraft's specific antenna and temperature probe placements. The Canopy Cover attaches using adjustable "belly straps", which run under the belly and connect to the other side of the cover with a quick-release plastic buckle. To ensure the most secure fit, high-quality shock cord is enclosed in the hem of the cover to help keep the cover tighter against the airplane. Canopy Covers are commonly referred to as Cabin Covers, Fuselage Covers, Canvas Covers, Canopy Caps, etc.

Each Canopy Cover is custom sewn and the corners are trimmed to match the colors of the airplane. The airplane's registration number can be imprinted onto both sides of the cover for an additional charge. A duffle bag is included with all Canopy Covers.

This cover type is made from Silver Acrylic Sunbrella canvas and is 100% lined with a soft and smooth microfiber. Bruce's Custom Covers developed this material combination especially for aircraft protection. The outer material is medium weight and treated for water resistance, UV resistance and anti-static buildup. The inner lining is a very soft and smooth microfiber to prevent scratching. The material is very reflective, and tests show that the cabin interior temperature can be reduced to near-ambient temperature on the hottest of days. It is water, ice and snow repellent, yet breathable to allow moisture to escape from between the cover and the aircraft surface.

The Canopy/Nose Cover combines a Canopy Cover and a Nose cover. The **Aero L-39 & L-59 Albatros Canopy Cover** is designed to enclose the windshield, all side windows, canopy roof, and extend forward to cover the nose. It is a one-piece cover. The Canopy Cover is custom designed for each model, as well as your aircraft's specific antenna and temperature probe placements. The Canopy Cover attaches using adjustable "belly straps", which run under the belly and connect to the other side of the cover with a quick-release plastic buckle. To ensure the most secure fit, high-quality shock cord is enclosed in the hem of the cover to help keep the cover tighter against the airplane. Canopy Covers are commonly referred to as Cabin Covers, Fuselage Covers, Canvas Covers, Canopy Caps, etc.

This cover type is made from Silver Acrylic Sunbrella canvas and is 100% lined with a soft and smooth microfiber. Bruce's Custom Covers developed this material combination especially for aircraft protection. The outer material is medium weight and treated for water resistance, UV resistance and anti-static buildup. The inner lining is a very soft and smooth microfiber to prevent scratching. The material is very reflective, and tests show that the cabin interior temperature can be reduced to near-ambient temperature on the hottest of days. It is water, ice and snow repellent, yet breathable to allow moisture to escape from between the cover and the aircraft surface.



Aero L-39 Canopy/Nose Cover, Engine Plugs



Aero L-39 Canopy/Nose Cover, Engine Plugs

Description	Part Number	Price
CANOPY COVER	**L39-000**	**$755.00**
CANOPY/NOSE COVER	**L39-010**	**$945.00**
FUSELAGE COVER (back to dorsal)	**L39-011**	**$2170.00**
FUSELAGE COVER (aft of dorsal)	**L39-012**	**$2520.00**
CANOPY/NOSE COVER, L-159 models	**L39-025**	**$945.00**

Section 2: Engine Covers

The **Aero L-39 & L-59 Albatros Intake Covers** are designed to install easily yet be completely storable. A spring steel hoop is sewn into the hem of each cover, allowing them to be installed without climbing onto the wing or using a stepladder. To store the covers the spring steel hoop folds like a band-saw blade into three nesting rings. Each cover folds into a compact circular bundle which is stored in the included duffle bag, yet they unfold quickly for use. The Tri-Fold Ring cover is made of medium weight nylon which is available in a variety of colors to match the paint trim. Each cover set comes complete with installation and folding instructions. The aircraft's registration number can be silkscreened onto the cover for an extra charge.



Aero L-39 Engine Cover, Snap-On Type



Aero L-39 Canopy Cover, Intake Covers

Description	Part Number	Price
INTAKE COVERS (set of 2)	**L39-105**	**$480.00**
EXHAUST COVER	**L39-202**	**$345.00**

Section 3: Plugs & Protection

Aero L-39 & L-59 Albatros Pitot Tube Covers, NOT HEAT RESISTANT TYPE, are made of Naugahyde vinyl, and are designed to cover the entire pitot assembly. Slipping over the tube, the cover tightens around the base with a Velcro strap detail. A "Remove Before Flight" streamer is attached to the cover. **Heat Resistant Pitot Covers** are an upgrade to this design, and help prevent the pitot cover from melting onto the tube if the pitot heat is accidentally turned on while installed. If you want the set tethered together, please let us know.

The **Aero L-39 & L-59 Albatros Intake/Exhaust Plugs** are custom fit for the intake and exhaust openings, made with heavy-duty vinyl material, and stuffed with a single block of sculpted urethane foam. Each plug has a zipper that allows the foam to be removed and dried if necessary. Engine plugs have 'remove before flight' streamers sewn onto the face of the plugs. Most plugs are imprinted with the aircraft registration number in black. Engine plugs may be inserted after flight when the engine is still warm. Engine Inlet Plugs are commonly referred to as Cowl Plugs, Intake Plugs, Cowl Blocks, Engine Blocks, and Engine Bungs.

The **Engine Exhaust Plugs** are custom fit for your Aero L-39 & L-59 Albatros exhaust openings, made with heavy-duty vinyl material, and stuffed with a single block of sculpted urethane foam. Each plug has a zipper that allows the foam to be removed and dried if necessary. Exhaust plugs have 'remove before flight' streamers sewn onto the face of the plugs. Most plugs are imprinted with the aircraft registration number in black for an extra charge. Exhaust plugs may be inserted soon after flight when the engine is still warm. Engine Inlet Plugs are commonly referred to as Cowl Plugs, Intake Plugs, Cowl Blocks, Engine Blocks, and Engine Bungs.

The **Engine Inlet Plugs** are custom fit for your Aero L-39 & L-59 Albatros intakes, made with heavy-duty vinyl material, and stuffed with a single block of sculpted urethane foam. Each plug has a zipper that allows the foam to be removed and dried if necessary. Engine plugs have 'remove before flight' streamers sewn onto the face of the plugs. Most plugs are imprinted with the aircraft registration number in black for an extra charge. Storage bag NOT included. Engine plugs may be inserted after flight when the engine is still warm. Engine Inlet Plugs are commonly referred to as Cowl Plugs, Intake Plugs, Cowl Blocks, Engine Blocks, and Engine Bungs.



Aero L-39 Canopy/Nose Cover, Engine Plugs



Aero L-39 Canopy Cover, Engine Plugs

Description	Part Number	Price
ENGINE INLET PLUGS (set of 2)	**L39-100**	**$545.00**
ENGINE INLET PLUGS (folding type) (set of 2)	**L39-101**	**$1075.00**
AIR CONDITIONING INTAKE/EXHAUST & NACA PLUGS (set of 4)	**L39-103**	**$270.00**
PITOT COVERS (set of 2)	**L39-110**	**$160.00**
EXHAUST PLUG	**L39-200**	**$230.00**
EXHAUST PLUG (folding type)	**L39-201**	**$435.00**

Section 4: Wing/Tail/Empennage Covers

The **Aero L-39 & L-59 Albatros Empennage Cover** is a complete, one-piece cover which covers both the vertical and horizontal stabilizers, as well as the tailboom. It is normally made from Solution-Dyed Polyester or Acrylic *Sunbrella* The cover attaches with adjustable straps underneath the belly. The cover is pulled back over the vertical stabilizer and a plastic all-weather zipper is closed at the trailing edge of the rudder. The cover is then stretched over the elevators and zippered closed along the bottom outboard elevator surfaces. The covers cinch under the horizontal stabilizers using adjustable straps. All antennas, beacons and static wicks, if applicable, are accounted for in the design.

ALL-YEAR USE MATERIAL - Made with Silver Acrylic Sunbrella canvas, the all-year use material is the best option for sun protection and cover longevity. This heavier more durable material is intended for all weather conditions, such as rain and snow or lots of sun.

WINTER USE MATERIAL - Made with Solution-Dyed Polyester fabric, this option is intended for seasonal use to aid in deicing, rain mitigation, or for occasional travel. The material is lighter and more compact, but more susceptible to UV damage and may have a shorter useful life if used continuously outside than the all-year use material.

The **Aero L-39 & L-59 Albatros Wing Covers** are a perfect solution to protect your paint from sun damage and prevent winter frost, snow, ice buildup, and corrosion. They are made from Solution-Dyed Polyester or Acrylic *Sunbrella* and form-fit to slip around each wing tip, cover the entire upper surface of the wing and wrap around the leading and trailing edges. The covers secure under the wing with adjustable straps from the trailing edge to the leading edge. The wing covers can also attach to each other with adjustable straps at the leading and trailing edges of the wing under the belly of the plane. In some instances, cut-outs are made in the trailing edge of the wing covers to accommodate static wicks. We have the ability to also accommodate wing tip modifications, such as STOL kits, droop tips, and vortex generators. Wing covers are labeled LEFT and RIGHT for your convenience. Wing Covers are available for winter use or long-term, all-year use. A Hail Protection version can be made which incorporates very dense closed cell foam into the entire upper surface of the wing covers to help prevent hail damage. Although these covers are bulky, they do help protect your wing and control surfaces against small to medium-size hail.

ALL-YEAR USE MATERIAL - Made with Silver Acrylic Sunbrella canvas, the all-year use material is the best option for sun

protection and cover longevity. This heavier more durable material is intended for all weather conditions, such as rain and snow or lots of sun.

WINTER USE MATERIAL - Made with Solution-Dyed Polyester fabric, this option is intended for seasonal use to aid in deicing, rain mitigation, or for occasional travel. The material is lighter and more compact, but more susceptible to UV damage and may have a shorter useful life if used continuously outside than the all-year use material.

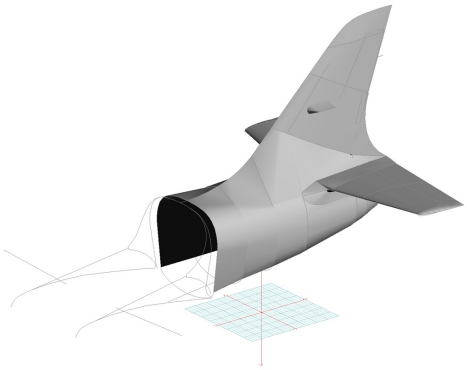

Aero L-39 Empennage Cover (3D Model)

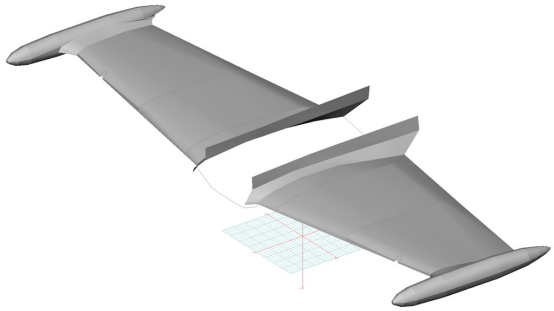

Aero L-39 Wing Covers (3D Model)

Description	Part Number	Price
WING COVERS (set of 2)	**L39-220**	**$1900.00**
WING COVERS, w/ tip tanks (set of 2)	**L39-225**	**$2655.00**
EMPENNAGE COVER (Tailboom, Vertical & Horiz Stabilizers), ext to dorsal front	**L39-400**	**$1570.00**

Section 6: Miscellaneous Products

Description	Part Number	Price
TIRE COVERS (specify tire size) (set of 3)	**L39-600**	**$375.00**

Section 7: Light Weight Products: Travel Covers and FlyAway Covers

The **Aero L-39 & L-59 Albatros Lightweight Travel Canopy Cover** will cover the same area as our standard Canopy Cover, but the material used is very lightwieight and will fold up and store in a much smaller space. This cover is ideal for the airplane that is hangered full time and only needs a cover on rare occasions.

Travel Covers are made with Silver Solution-Dyed Polyester fabric and only lined over the windshield to save weight. The material is lightweight and more compact for easy stowage in the aircraft. The polyester material is water resistant, but only intended for occasional use outside. We also have an ultra lightweight material available for fitted hangar dust covers. For daily outdoor use, the non-travel Sunbrella Cover is the best choice.



Aero L39 Canopy Cover



Canopy Cover for Aero L-39 Albatros

Description	Part Number	Price
TRAVEL COVER, Light Weight Canopy Cover	**L39-805**	**$600.00**
TRAVEL COVER, Light Weight Travel Canopy/Nose Cover	**L39-810**	**$755.00**
TRAVEL COVER, Light Weight Travel Canopy/Nose Cover, L-159 models	**L39-815**	**$755.00**

Prices subject to change. Other Covers and Design Alterations: Prices on request.
Prices are FOB Morgan Hill, CA. Sales tax on orders shipped to California addresses. Orders take approximately 3 weeks to complete. For domestic orders we normally ship by UPS ground service. Next day shipping and air parcel post is available on request. We can take payment by Visa, Mastercard, American Express, or Discover.

Bruce's Custom Covers offers protective covers and plugs for virtually every type of airplane, jet and helicopter. If you have questions about our products please call any time TOLL FREE: 800/777-6405, or FAX: 408/738-2729.

BRUCE'S CUSTOM COVERS

A division of Aircraft Covers, Inc.

18850 Adams Ct.
Morgan Hill, CA 95037
www.AircraftCovers.com

Aircraft Cover Ordering Form

Customer Info

Name _____

Shipping Address _____

_____

Phone & Email _____

Payment

Credit Card Number ☐☐☐☐☐☐☐☐☐☐☐☐☐☐☐☐

Exp. Date ☐☐ / ☐☐ V-Code* ☐☐☐☐

**Visa, Mastercard, Discover: last 3 numbers on back of card, right of signature. Amex: 4 smaller numbers printed on face of card.*

A/C Info

Reg / Tail Number: _____ Aircraft Type: _____ Year: _____

Colors / Paint Scheme (be specific): _____

Please specify below the items you would like to order.

See technical sheet or visit our website for part numbers (or just fill in the description)

	Part Number	Quant	Description	Price
1				
2				
3				
4				
5				
6				
7				
8				
9				
10				
			TOTAL	

Optional Items (check the box of the item you want)

☐ ***Imprint** aircraft registration number onto both sides of canopy cover.....$35.00*

☐ ***Imprint** aircraft registration number onto Jet intake covers.....$55.00*

Ph: 408/738-3959 • Toll Free: 800/777-6405 • Fax: 408/738-2729 • bruce@aircraftcovers.com